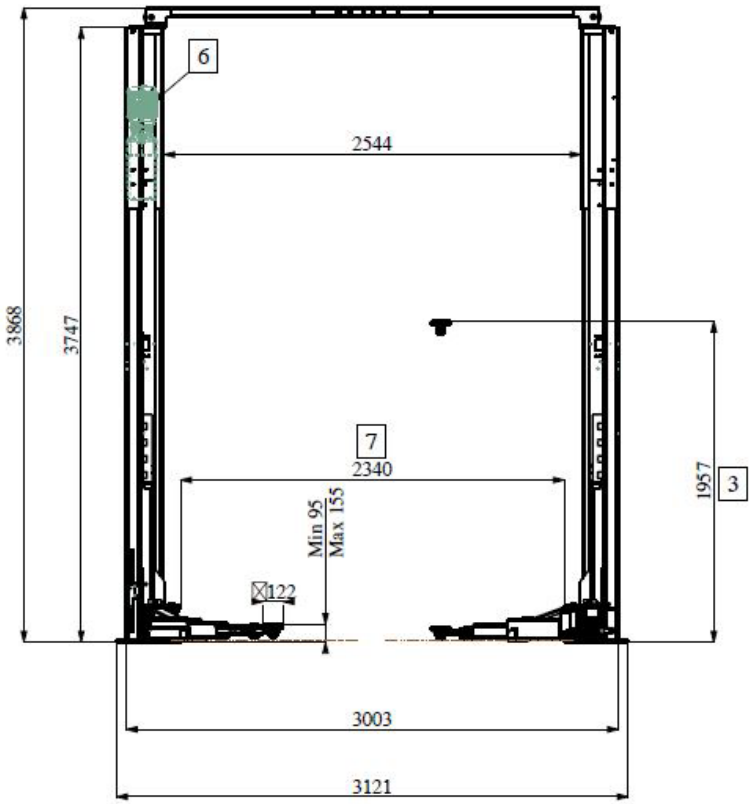

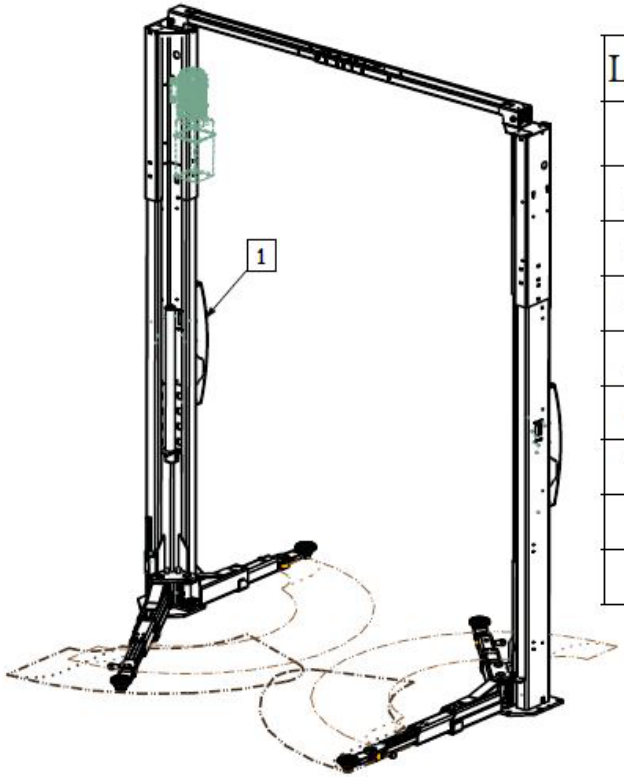

Lifting Capacity 3500 kg	
1	Control unit electric supply 3Ph/400V/50Hz/4kW, protection IP 54
2	Lifting pad diameter 122 mm
3	Lifting height 1957 mm - Lifting time - 30 sec
4	Long lifting arms (686 - 1474) mm
5	Short lifting arms (668 - 1143) mm
6	Hydraulic power unit
7	Clearance width 2340 mm
*	If no solid floor is available, the foundation must be at least 3820x1650x200. Concrete quality B25 (C25/20) with reinforcement in concrete.
*	2. Control unit, socket and air plug (acessories)

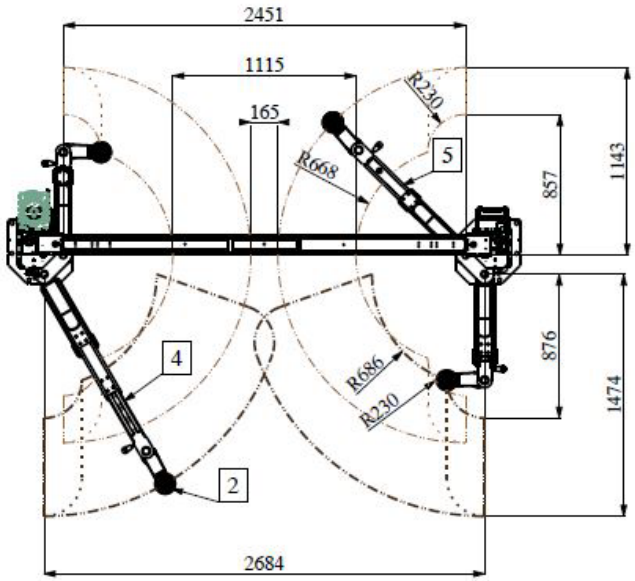

Surface pressure p=1.73daN/cm^2

REV	CO NUM	DATE	BY

TOLERANCE UNLESS OTHERWISE SPECIFIED:
ANGULAR = ± 1°
.X = ± .1"
.XX = ± .06"
.XXX = ± .030"
.XXXX = ± .0100"

THIRD ANGLE PROJECTION

DO NOT SCALE DRAWING

UNLESS OTHERWISE SPECIFIED: ALL DIMENSIONS IN INCHES .03" MIN. CORNER BREAK REMOVE ALL BURRS

NOTES:

The design and detail illustrated in this drawing is the property of Rotary Lift. It is being loaned with the expressed condition that it will not be duplicated or used except by permission and is subject to return upon request

SPOA3T-EH2-EV

ROTARY LIFT
A DOVER INDUSTRIES COMPANY

DRAWN	SCALE	SHEET
Z. GHUMMAN	3:100	1 of 1
APPROVED	DATE	DRAWING NUMBER
A. MURRU	4-4-22	049607070