MB Vito

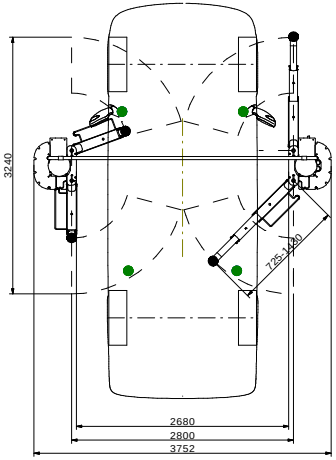

MB Sprinter Mittel altern. Punkte

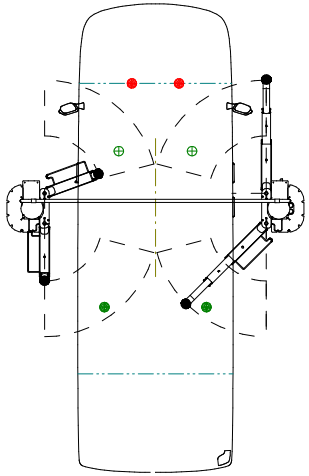

MB Sprinter lang altern. Punkte

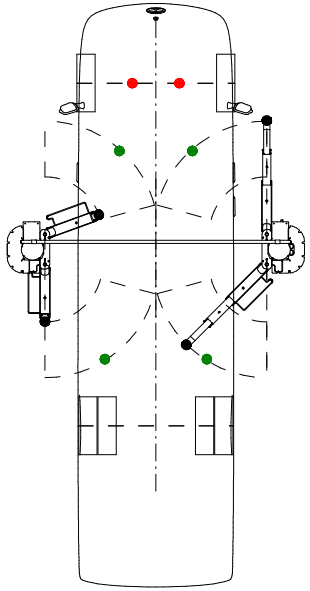

BMW 7er

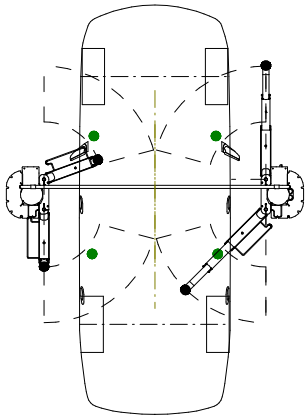

VW T5

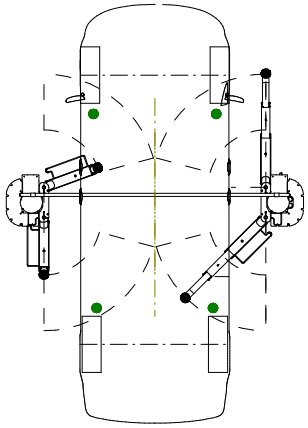

Porsche Cayenne

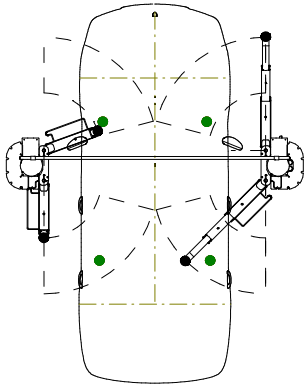

BMW Z4

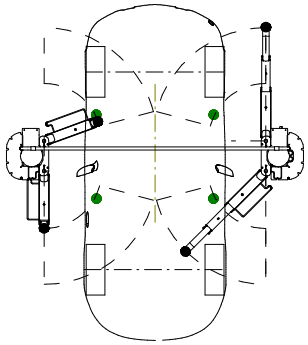

VW Golf

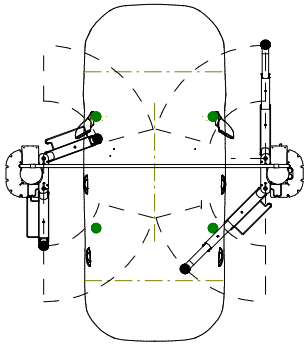

Audi Q7

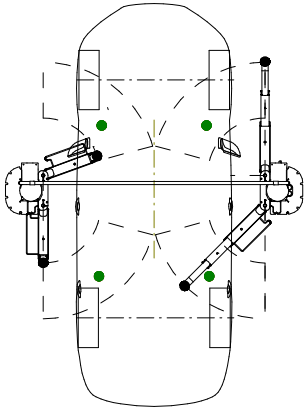

smart

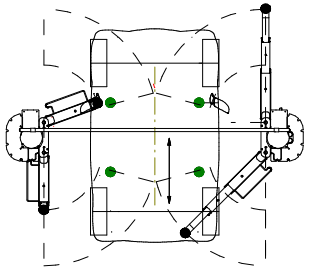

BMW 3er

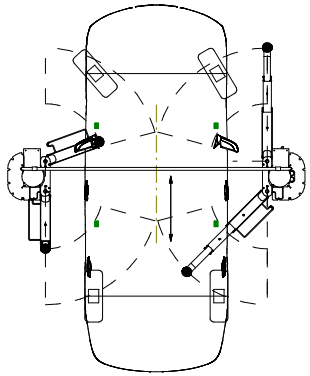

Alle Maße in Millimeter
all dimensions in millimeter

Mass- und Konstruktionsänderungen vorbehalten!
subject to alterations!

REV	CO NUM	DATE	BY

UNLESS OTHERWISE NOTED:
ANGULAR DIMENSIONS: ±: °
OTHER DIMENSIONS: ± 0.8mm (<305mm)
± 1.6mm (>or= 305mm)

THIRD ANGLE PROJECTION

DO NOT SCALE DRAWING

UNLESS OTHERWISE SPECIFIED:
0.8mm MIN. CORNER BREAK
REMOVE ALL BURRS

NOTES:

Tragfähigkeit: max.4000kg
capacity

The design and detail illustrated in this drawing is the property of Rotary Lift. It is being loaned with the expressed condition that it will not be duplicated or used except by permission and is subject to return upon request.

SPM40

ROTARY LIFT
A DOVER COMPANY

DRAWN	SCALE	SHEET
MG		1 of 1
APPROVED	DATE	DRAWING NUMBER
	06-12-16	SPM40_8503-1